PHILIPS

Lighting



Ledinaire SlimDownlight

DN065B G4 LED12/830_840_865 12W D150 RD

Ledinaire SlimDownlight, Recessed, All-in, 12 W, D150 mm, 1200 lm, 3000 K, 4000 K, 6500 K, Beam angle 110°, White, IP20/44

The LEDINAIRE range contains a selection of popular off-the-shelf LED luminaires that come with the high Philips quality levels at a competitive price. Reliable, energy-efficient and affordable – just what you need

Product data

General Information	
Light source replaceable	No
Driver included	Yes
Lighting Technology	LED
Value ladder	Value

Light Technical	
Luminous Flux	1,200 lm
Luminous Efficacy (rated) (Nom)	100 lm/W
Correlated Color Temperature (Nom)	3000 4000 6500 K
Color rendering index (CRI)	80
Flickering value (PstLM) - Flickering value as per EN 61000-3-3	0.7
Stroboscopic effect visibility measure (SVM)	0.4
Light source color	Multi Color Temperature
Optic type	Beam angle 110°
Luminaire light beam spread	110°
Unified glare rating CEN	28
Photobiological safety according to EN 62471	RG0
All-in Type	All-in, Multi Color Temperature

Operating and Electrical	
Input Voltage	220 to 240 V
Line Frequency	50 or 60 Hz
Input Frequency	50 or 60 Hz
Inrush current	3.85 A
Power Consumption	12 W
Power Factor (Fraction)	0.9
Connection	Screw connection block 2-pole
Number of products on MCB of 16 A type B	74

Temperature	
Ambient temperature range	-20 to +40 °C

Ledinaire SlimDownlight

Controls and Dimming	
Dimmable	No
Driver/power unit/transformer	Power supply unit (On/Off)
Constant light output	No

Mechanical and Housing	
Housing Material	Metal–Plastic
Reflector material	-
Housing Color	White
Overall length	175 mm
Overall width	175 mm
Overall height	45 mm
Overall diameter	175 mm
Dimensions (Height x Width x Depth)	45 x 175 x 175 mm

Approval and Application	
Ingress protection code	IP20/44 [Finger-protected; wire-protected, splash-proof]
Mech. impact protection code	IK03 [0.3 J]
Protection class IEC	Safety class II
Flammability mark	For mounting on normally flammable surfaces
CE mark	CE mark
Warranty period	3 years
EU RoHS compliant	Yes

Initial Performance (IEC Compliant)	
Luminous flux tolerance	+/-10%
Initial chromaticity	(0.44, 0.403) SDCM≤5
Power consumption tolerance	+/-10%

Over Time Performance (IEC Compliant)	
Lumen maintenance at median useful life* 50000 h	L65

Product Data	
Order product name	DN065B G4 LED12/830_840_865 12W D150 RD
Full product name	DN065B G4 LED12/830_840_865 12W D150 RD
Full product code	871951446443800
Order code	929003251332
Material Nr. (12NC)	929003251332
Numerator - Quantity Per Pack	1
Net Weight (Piece)	0.210 kg
EAN/UPC - Product/Case	8719514464438
Numerator - Packs per outer box	12
EAN/UPC - Case	8719514464445

Dimensional drawing

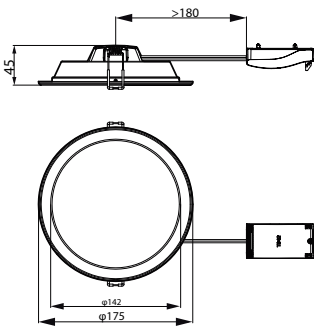

Ledinaire SlimDownlight

Photometric data

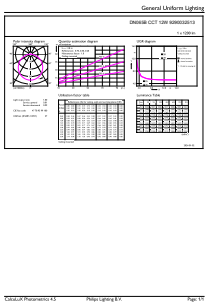

General uniform lighting - DN065B G4 LED12/830_840_865 12W D150 RD

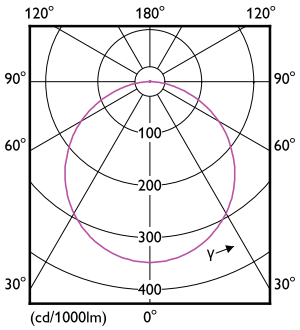

Light Distribution Diagram - DN065B G4 LED12/830_840_865 12W D150 RD

© 2024 Signify Holding All rights reserved. Signify does not give any representation or warranty as to the accuracy or completeness of the information included herein and shall not be liable for any action in reliance thereon. The information presented in this document is not intended as any commercial offer and does not form part of any quotation or contract, unless otherwise agreed by Signify. Philips and the Philips Shield Emblem are registered trademarks of Koninklijke Philips N.V.